University of Idaho
College of Engineering

360 Designs

Members:

Mark Jennings (EE)
Tanner Sloan (ME)
Jacob Metter (ME)

Sponsor: EPC

Objective Statement - Overall

- Create an interactive, eye catching display to act as an effective sales tool at road shows
- Effectively educate potential customers and new EPC employees
- Highlight unique features of the 58TP, A58HE, 15T, and the 30M
- Easy and intuitive to use

ENCODER PRODUCTS COMPANY

Design Goals - Programmable Display

- Integrate the 58TP to a linear actuator and HMI which will allow the user to change the resolution of the 58TP.

- Stepper motor will drive the block/ stage to a distance set by the user; a certain success routine will occur based on how close the user gets.

- The user can adjust the 58TP resolution and try again.

Deliverables - Overall

- 3-4 prototype encoder modules
- Logbooks
- Project Poster
- 3-4 final encoder modules

Value Proposition

Our design will...

- Highlight the programmable aspect of the 58TP Encoder.
- Utilize a “mini-game” to be fun and interactive.
- Draw potential customers to our booth at road shows.
- Illustrate 58TP capabilities to EPC visitors
- Educated new EPC employees on the 58TP

Product Requirements

- Product should be easily assembled/disassembled
- Run on a standard 120V outlet for 8 hours/day
- Display should be eye-catching and be able to attract a crowd
- Each display should be easily connected to the HMI+PLC

Project Development

Mechanical Engineering

Project Development

Mechanical Engineering

Project Development

Mechanical Engineering

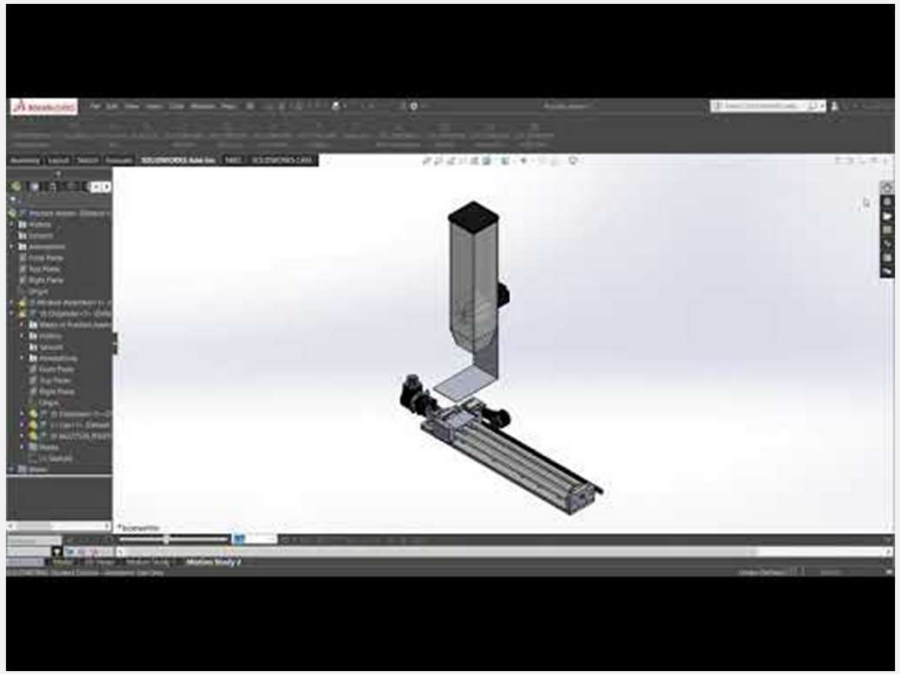

Animation of the design.

Success Routines

- Congratulation images, videos, and audio on the Unitronics screen
- Random candy dispensed
- Other interactive physical success routines

Success Routines

Success Routines

Project Development

Electrical Engineering

Project Development

Electrical Engineering

Program Button

On: Program Encoder

Windows 10 Tablet

Off: Run Display

Unitronics HMI+PLC Unit

Actuator

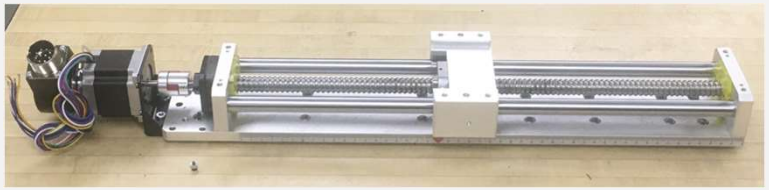

UNITRONICS®

Project Development

Electrical Engineering

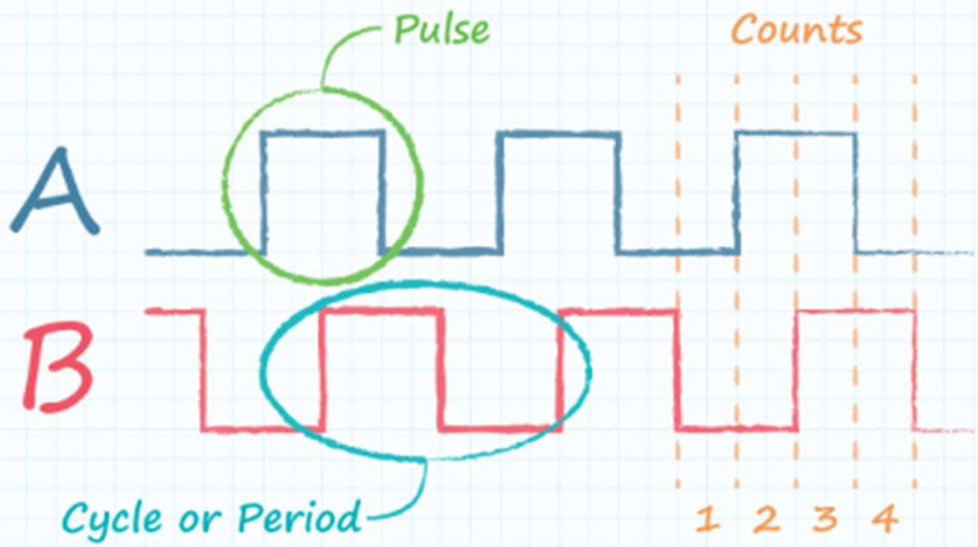

1 CPR (cycle per revolution) =

4 counts (transition states) per revolution for A/B

Project Development

Electrical Engineering

- Unitronics High Speed Input Output IO Module: UID-0808THS

  Quadrature Mode: 200kHz Max - t_p = 5μs minimum

  Max speed at 65,536 CPR = 3rps = 0.59 inch/s = 25s/15 inches

  Pulse/Direction Mode: 250kHz Max - t_p = 4μs minimum

  Max speed at 65,536 CPR = 3.8rps = 0.75 inch/s = 20s/15 inches

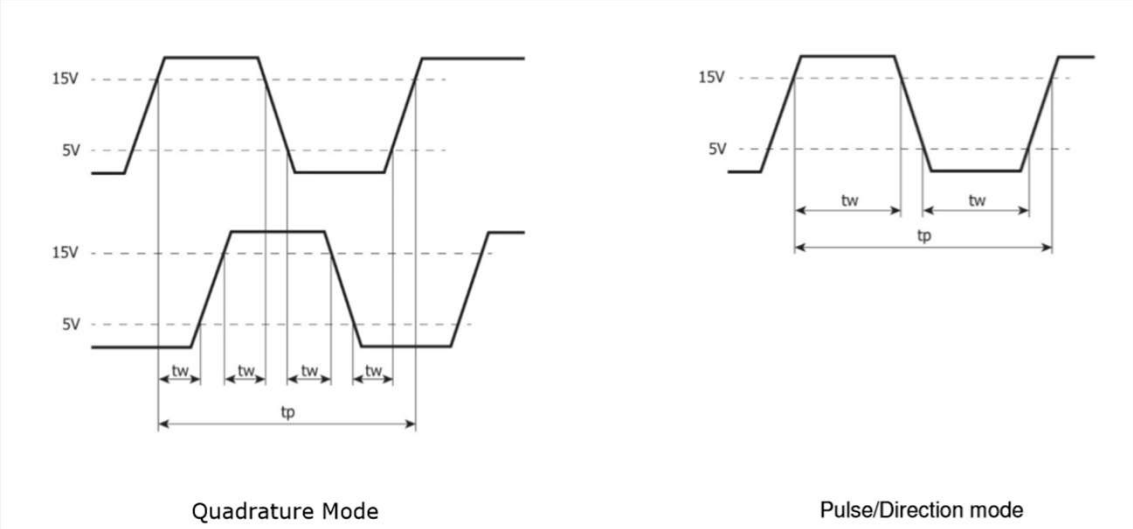

Project Development

Electrical Engineering

- TR2 Linear Encoder

  Accuracy .....±0.0005inch/inch max accumulated error

  ~15 inches (max distance) = ±0.0075inch

- Ball Screw: 5mm/ cycle - repeat positioning accuracy: ± 0.0008inch
- Nema 23 Motor: 200 steps/ cycle

  0.001inch increments ±0.00005inch

- 58TP: Programmable 1 - 65,536 CPR

  400 CPR will easily provide exact Nema 23 step location

  User input =be divided by 128 (2^7) to increase usable range to 51,200 CPR

Project Development

Electrical Engineering

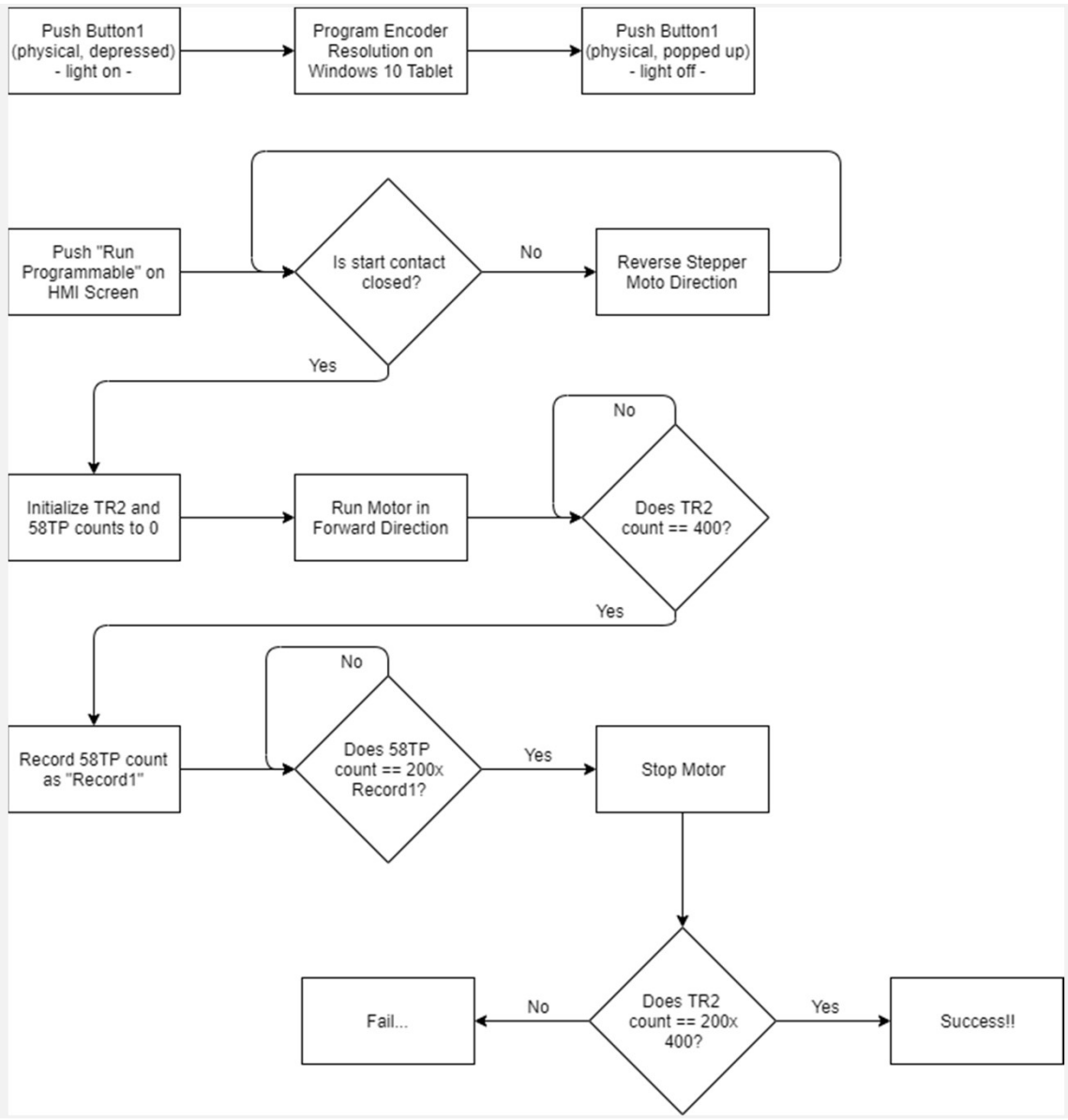

Project Challenges

- HMI+PLC coding
  - Seamless integration with success routine graphics
  - Advanced looping and interrupt routines using ladder logic thru UniLogic
- Using the TR2 for direct linear measurement vs. second 58TP
- Designing additional success routines and integrating them into the HMI+PLC
- Connecting the TR2 to the actuator block

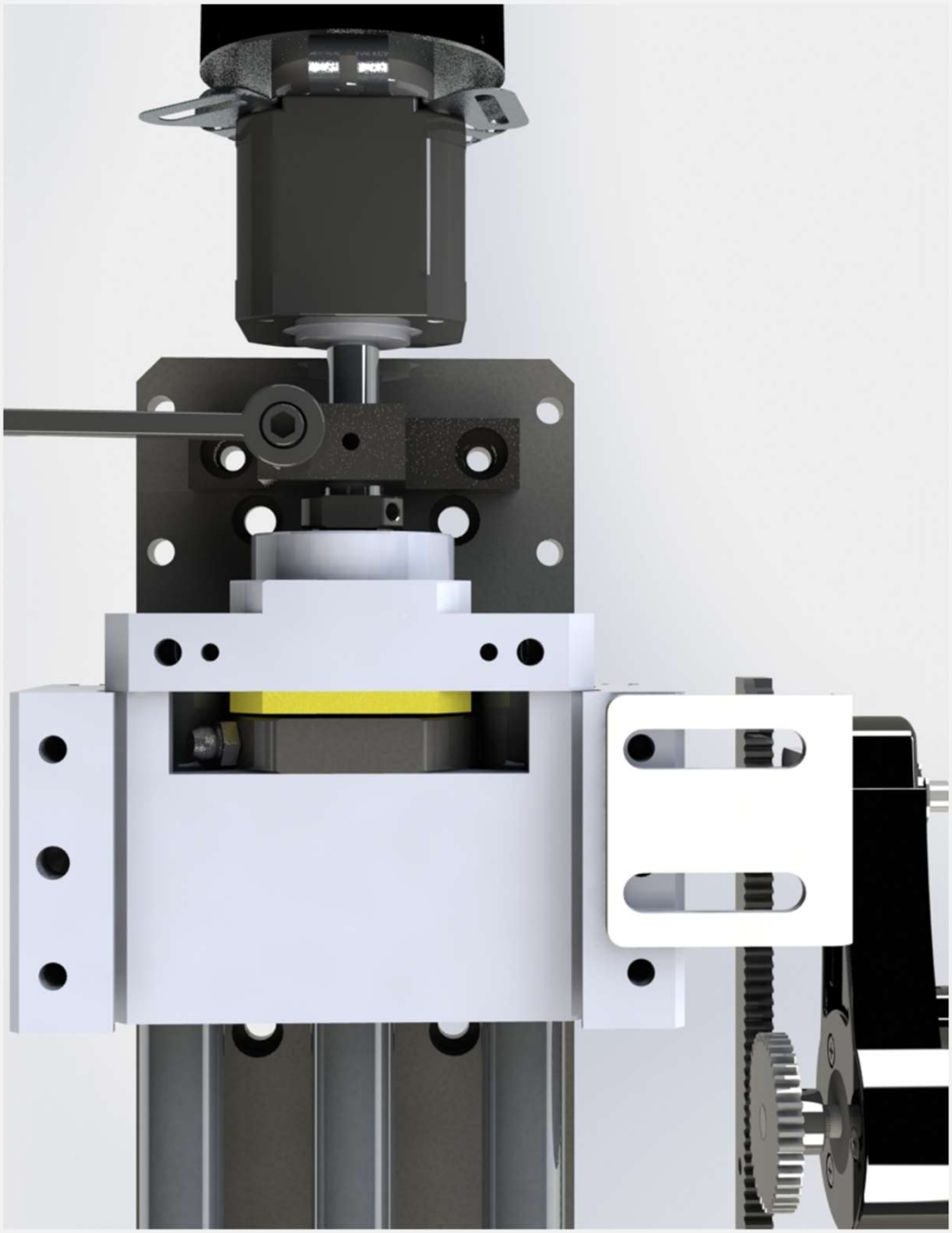

Fall Schedule

October

10/03 - Present programmable encoder display ideas
10/03 - Meeting 1 w/ EPC 3-3:30pm
10/17 - Revise and look to finalize the Programmable Design
10/17 - Meeting 2 w/ EPC 3-3:30pm
10/31 - Review and approve purchases, discuss future purchases
10/31 - Meeting 3 w/ EPC 3-3:30pm

November

11/14 - Build the programmable encoder design

11/14 - Meeting 4 w/ EPC 3-3:30pm

11/21 - Improve final program. encoder design
11/21 - Concept Design Review (Programmable Encoder)
11/25-29 - Thanksgiving Break - no EPC Meeting

December

12/05 - Present Programmable Design to EPC in Sagle, ID
12/12 - Present absolute encoder ideas
12/12 - Meeting 5 w/ EPC 3-3:30pm
12/16-20 - University Finals Week

Budget

Capstone Project Budget

Project:	360 Designs
Last Updated	11/19/2019

Expense Items	Vendor	Date Puchased	Year: Sept	Oct	Nov	Dec	Jan	Feb	Mar	Apr	Item Total		
Equipment/Tools:													
											$ -		
Travel:													
											$ -		
											$ -		
Supplies / Parts / Services:													
linear actuator	Amazon	10/27/2019		$ 177							$ 177		
stepper motors	Amazon	10/27/2019		$ 44							$ 44		
brackets	Amazon	10/27/2019		$ 11							$ 11		
speaker	Amazon	11/18/2019			$ 17						$ 17		
food dispenser	Amazon	11/18/2019			$ 16						$ 16		
											$ -		
											$ -		
											$ -		
											$ -		Expenses
												$ 265	Subtotal
Shop Usage (est. Hrs):											Hours		
											0		
											0		
											0		
Tax Expenses											0		
Purchase from 10/27/2019				14							14		
Purchase from 11/18/2019				2							2		
											0		

Graduate Student Support	$ -	including fringe	
Shop Overhead	$ -		
University Overhead	$ 13	5% of all expenses	
Totals	$ 278	$ 4,000	$ 3,722
		Budget	Excess

Future Work

- Complete Unitronics HMI+PLC integration
- Design and implement additional success routines
- Complete physical modular design: ease of use, sleek design

Questions?