Data Acquisition System for Synchronous Generator Transient Performance

Sponsor: SEL SCHWEITZER ENGINEERING LABORATORIES

University of Idaho
College of Engineering

Team: PREW Generation

Abdulwahab Aljabrine

Elliott Sher

Renjie Xia

ZhenWei Wu

University of Idaho
College of Engineering

Problem Statement

Design and implement a system to acquire measurements from 20 kVA synchronous generator during transient conditions

System Requirements

- Must sample at 10kHz
- Measurements must be time synchronized
- Measurement must be monitored and streamed

Measurement Requirements

- Terminal Voltage and Current
- Field Voltage and Current
- Torque and Power
- Speed and Frequency
- Load Phase Angle

System Topology

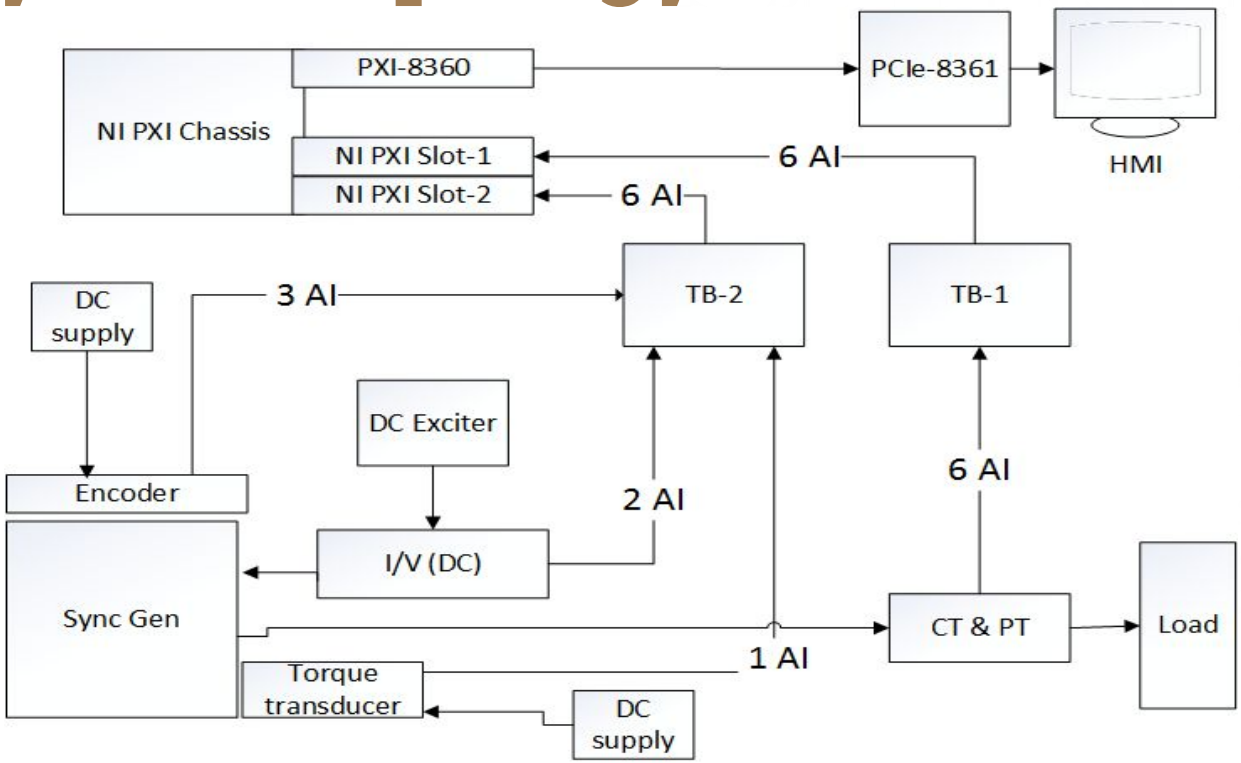

University of Idaho
College of Engineering

Equipment

- DC Voltage Divider- Shunt resistors
- CT/PT
- Torque Transducer
- Encoder
- PXI DAQ

Torque Relation

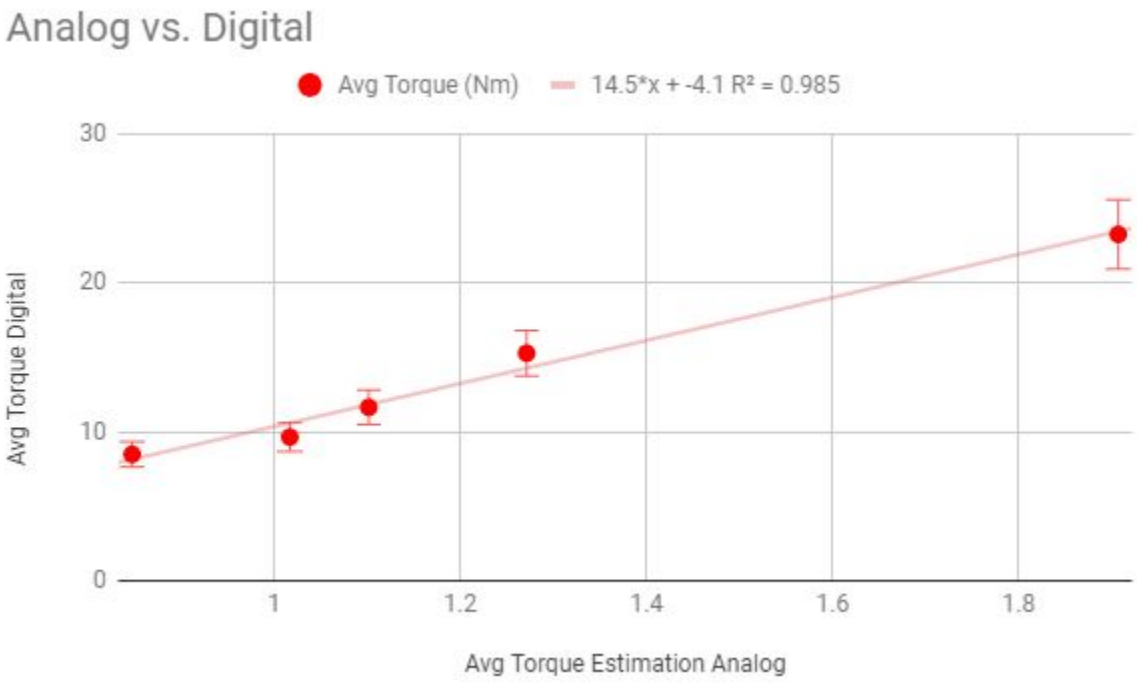

University of Idaho
College of Engineering

Synchronization

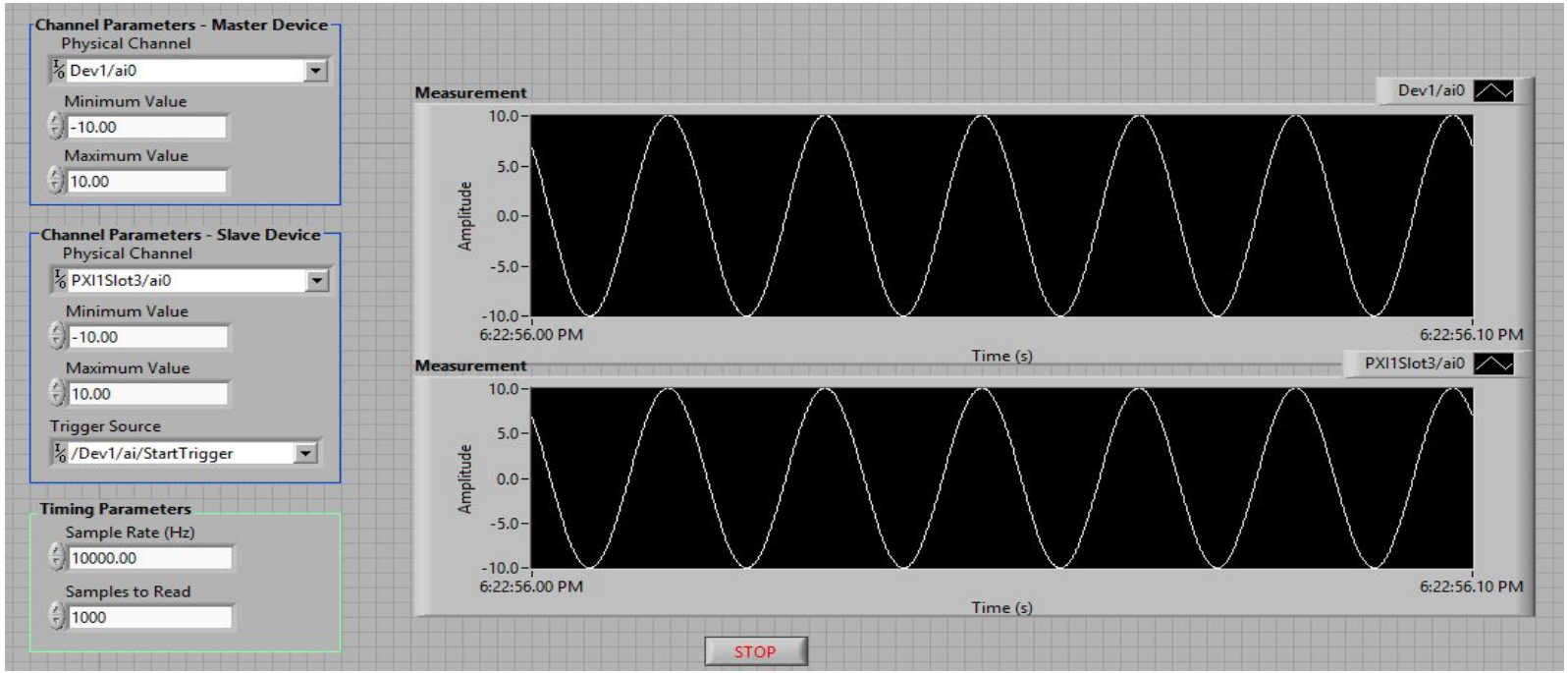

University of Idaho
College of Engineering

DC Circuit

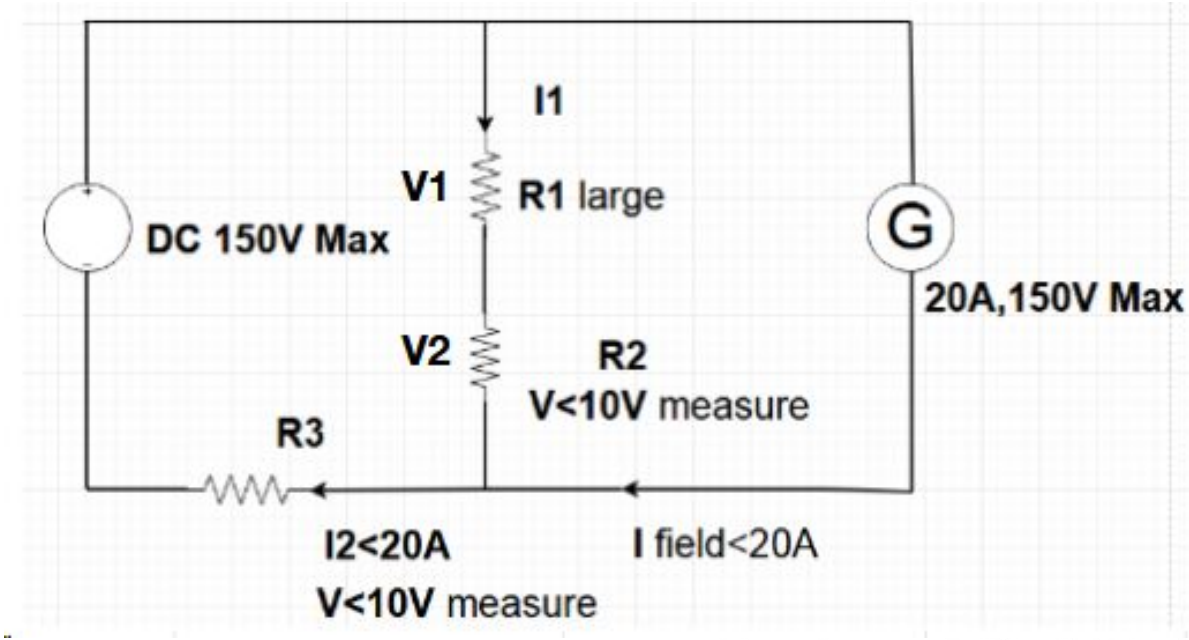

University of Idaho
College of Engineering

Budget

Capstone Project Budget - Fall/Spring

Project:SEL- Data Acquisition System for Synchronous Generator Transient Performance

Last Updated 2/28/2019

Expense Items	2018 Sept	Oct	Nov	Dec	Jan	Feb	Mar	Apr	Item Total		
Equipment/Tools:											
Devices:											
TB 2706*2						$ 572.4			$ 572		
Vishay Dale Resister(Res7.5)						$ 4.39			$ 4.39		
Vishay Dale Resister(Res0.1)						$ 10.19			$ 10.19		
Ohmite Resister(Res 500)						$ 6.59			$ 6.59		
PT*5						$ 39.8			$ 39.8		
Cable1(2 pin: DC Power)						$ 80			$ 80		
Cable2(4 pin: Analogue)						$ 100			$ 100		
Extra Hardware	$ -	$ -	$ -			$ -			$ -		
Shipping fee						$ 25			$ 25		
Poster							$ -		$ -		
									$ -		Expenses
										$ 838.41	Subtotal
								Totals	$ 838.41	$ 4,000.00	$ 3,161.5
										Budget	Excess

University of Idaho
College of Engineering

Plan for Completion

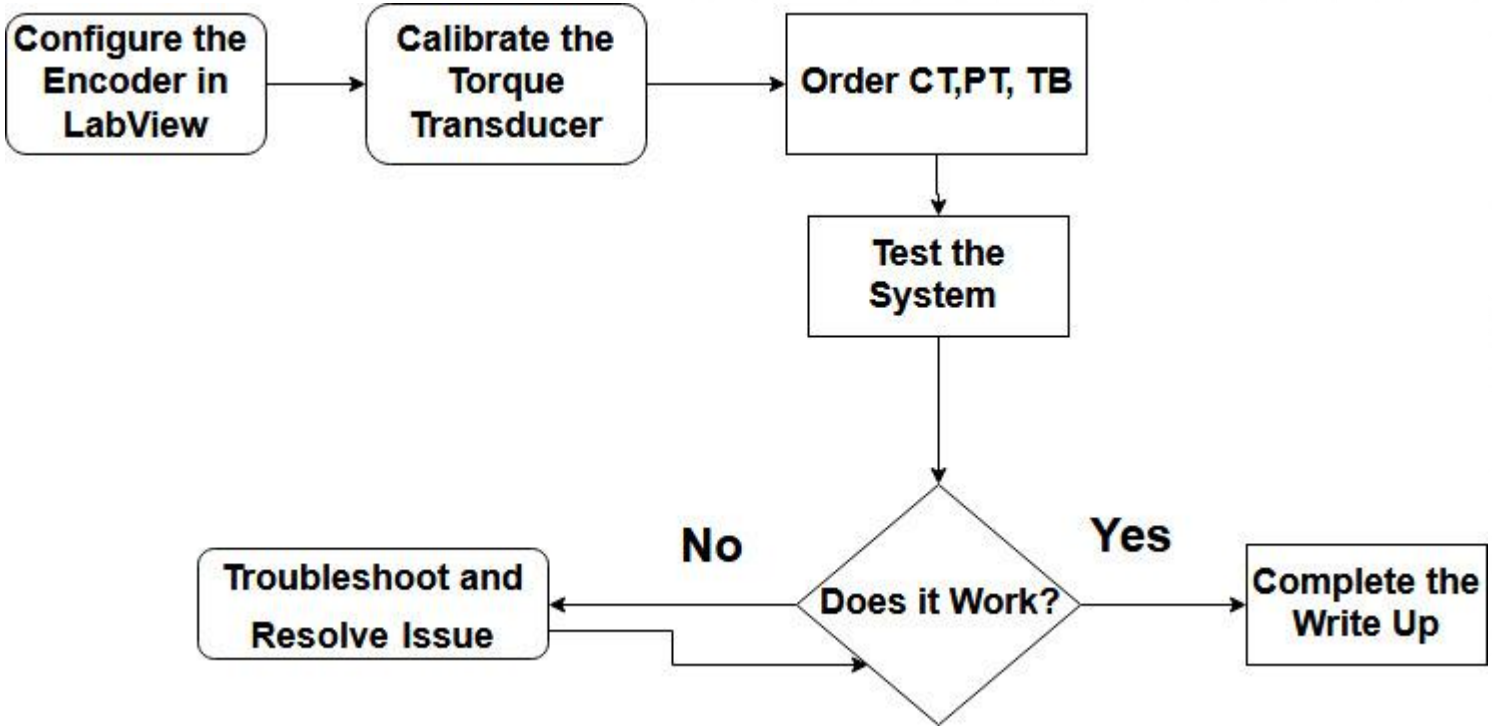

University of Idaho
College of Engineering